Specification Sheet

EMPIRE ROYAL
627.10.333.xxx
Single lever washbasin mixer ½“
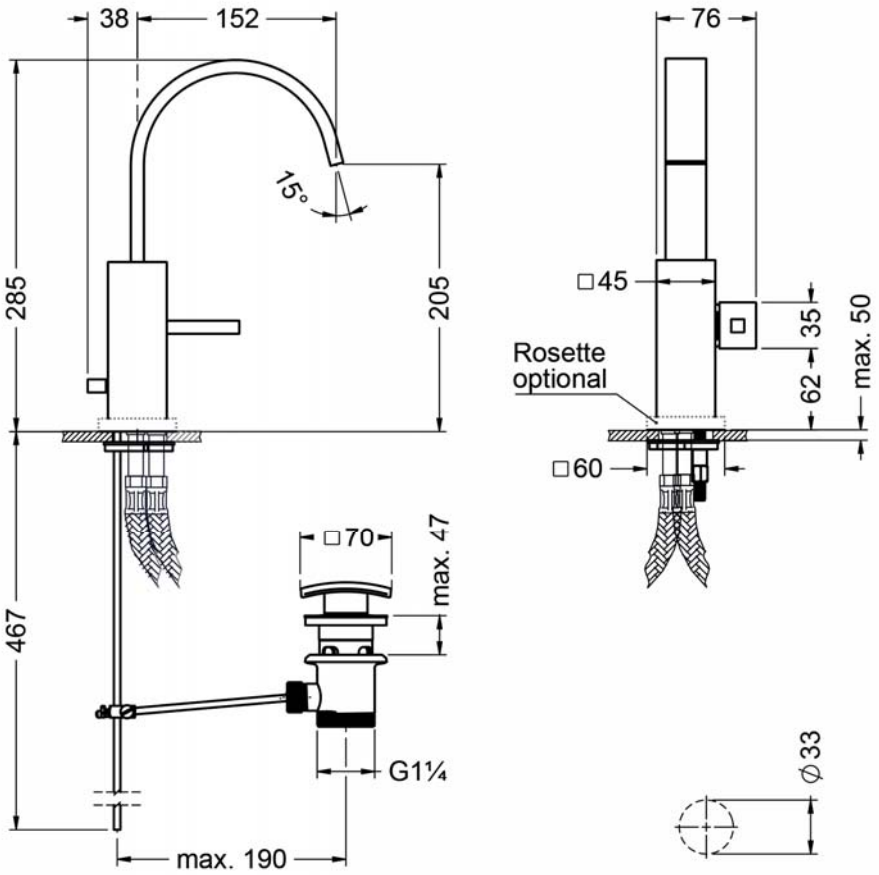
- spout projection 140 mm
- height 285 mm
- swivelling spout
- aerator M16,5x1
- cartridge with ceramic discs ½“
- pop-up waste square design
- 2 pressure hoses M10x1 x 450 mm