Specification Sheet

EXAL
632.10.334.xxx
Single lever washbasin mixer ½“
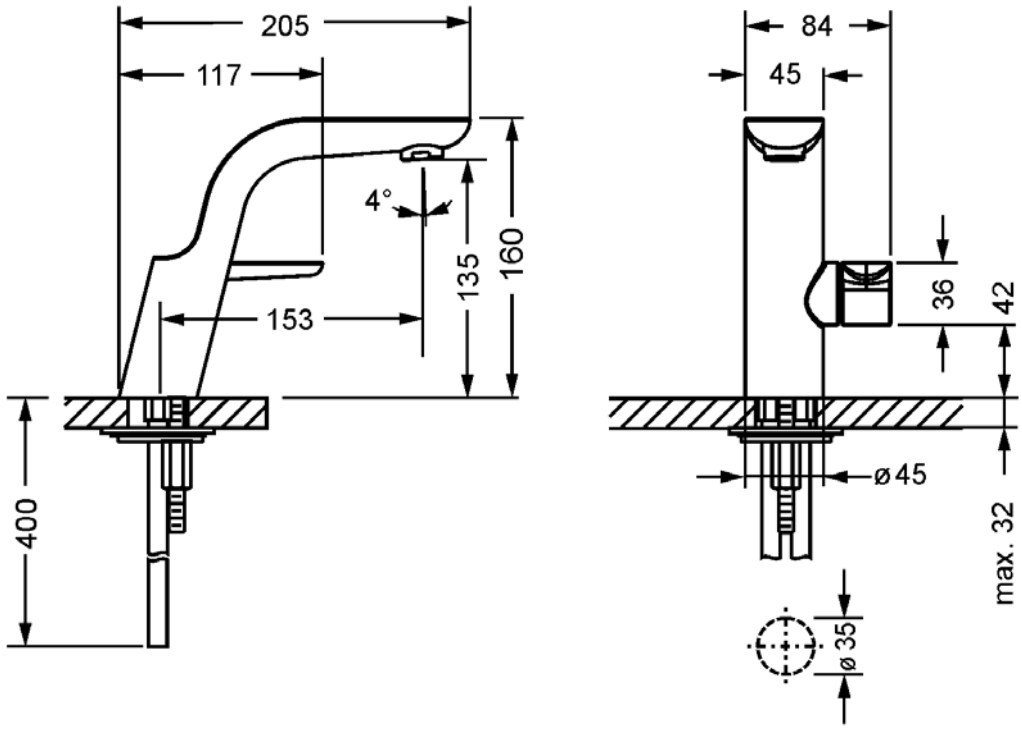
- spout projection 153 mm
- height 160 mm
- aerator M24 x 1, adjustable
- flow rate 13 l/min at 3 bar
- cartridge with ceramic discs ½“
- 2 pressure hoses M8x1 x ⅜” x 450 mm
- without waste
- acoustic group I