Specification Sheet

ELEVEN
633.10.333.xxx
Single lever washbasin mixer ½“
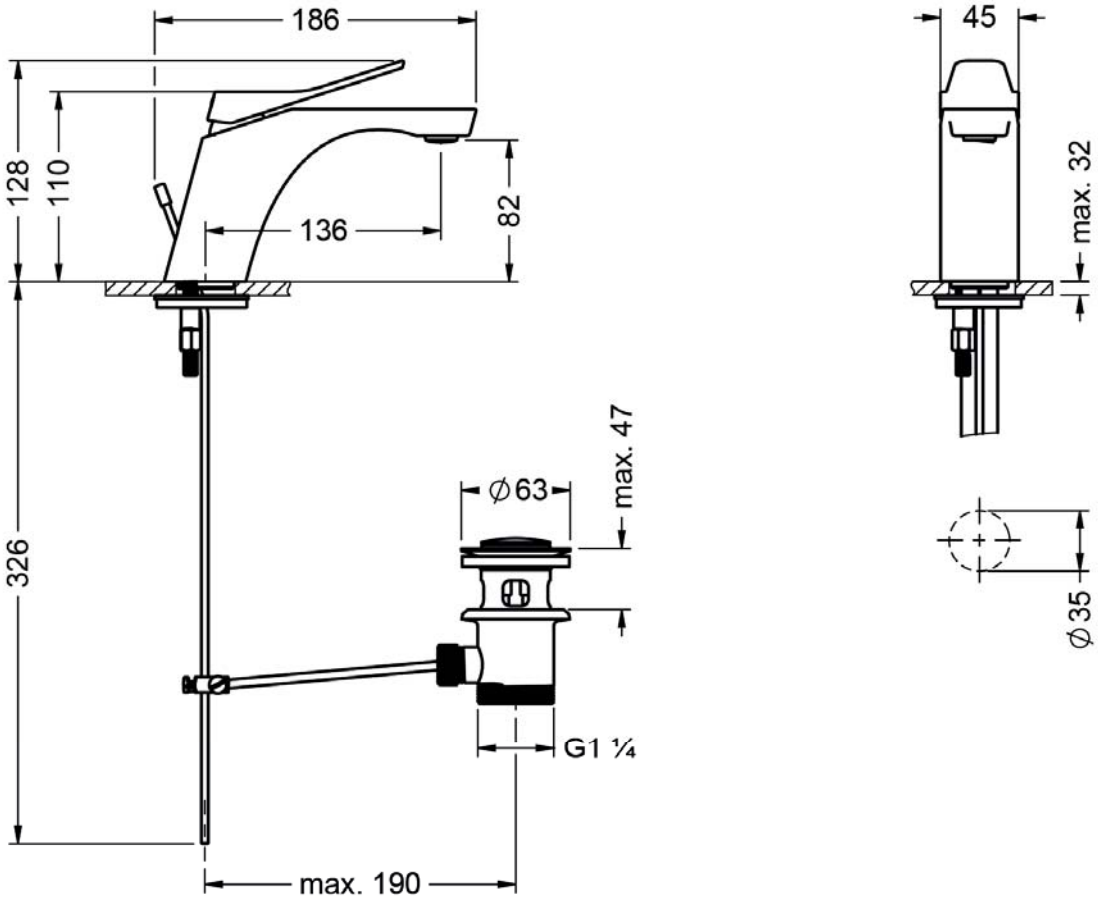
- spout projection 136 mm
- height 128 mm
- aerator M24x1, adjustable
- cartridge with ceramic discs ½“
- lift rod and pop-up waste 1 ¼“
- 2 pressure hoses M8x1 x ⅜” x 450 mm
- acoustic group I